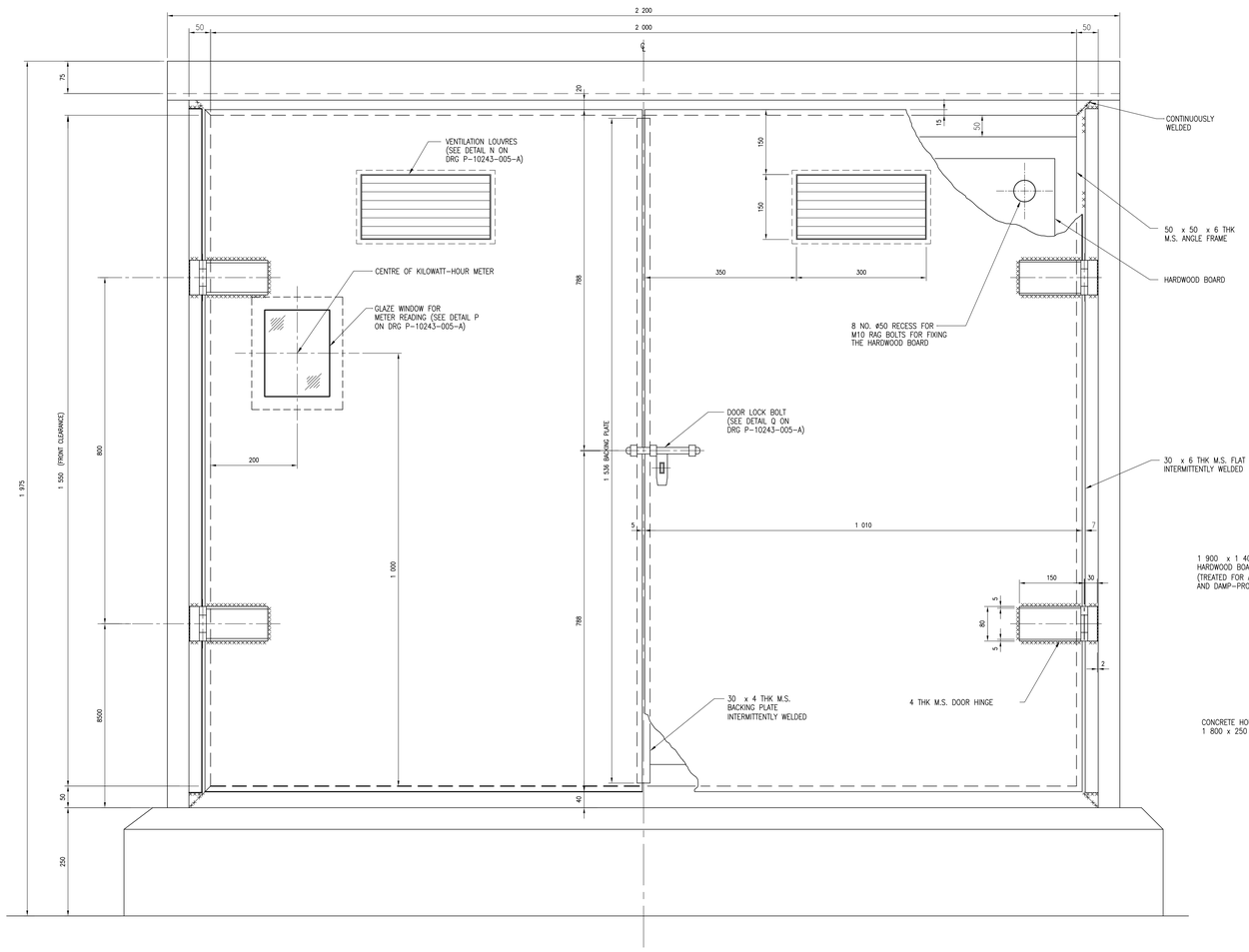

FRONT ELEVATION

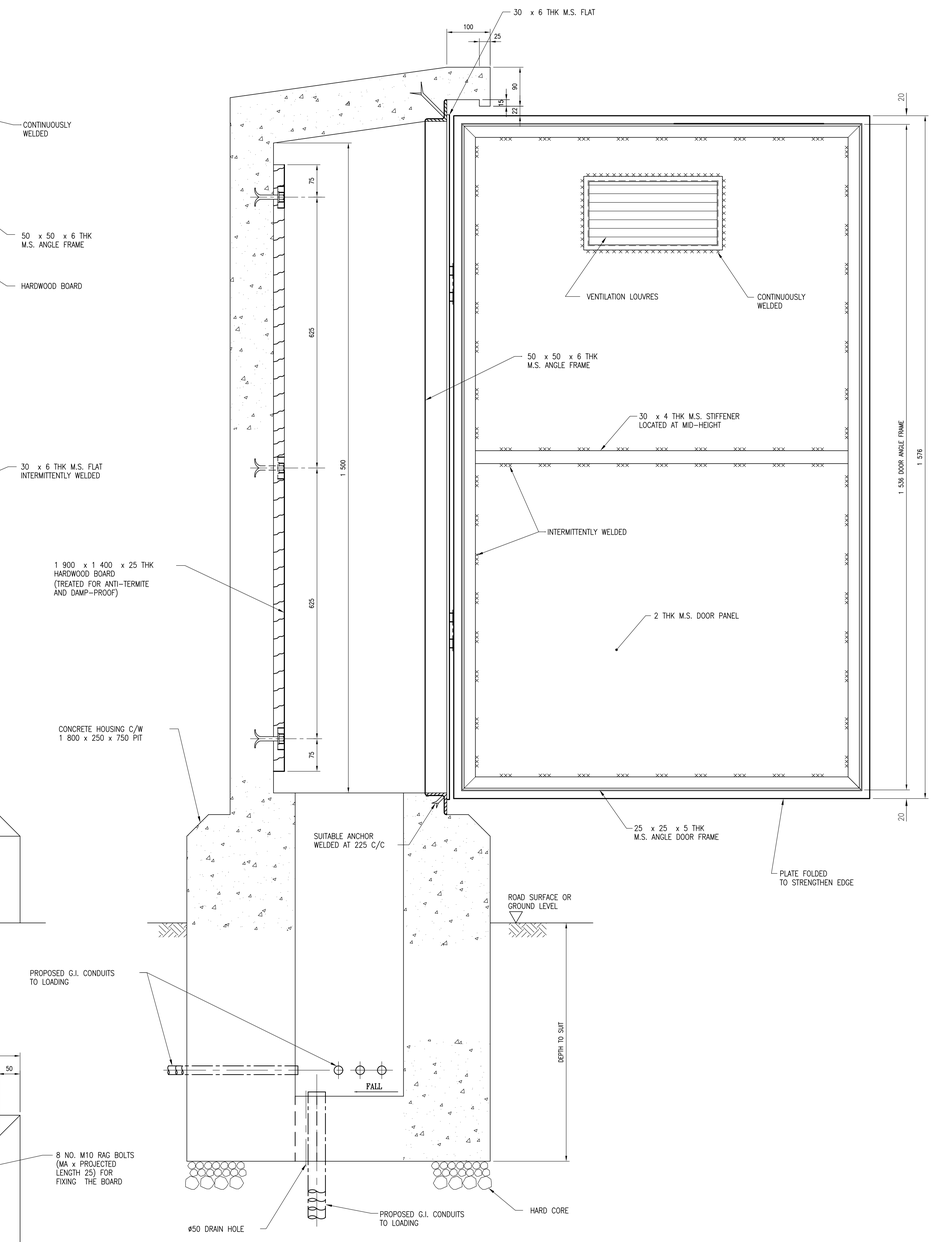

SECTIONAL SIDE ELEVATION
(WITH DOOR OPENED)

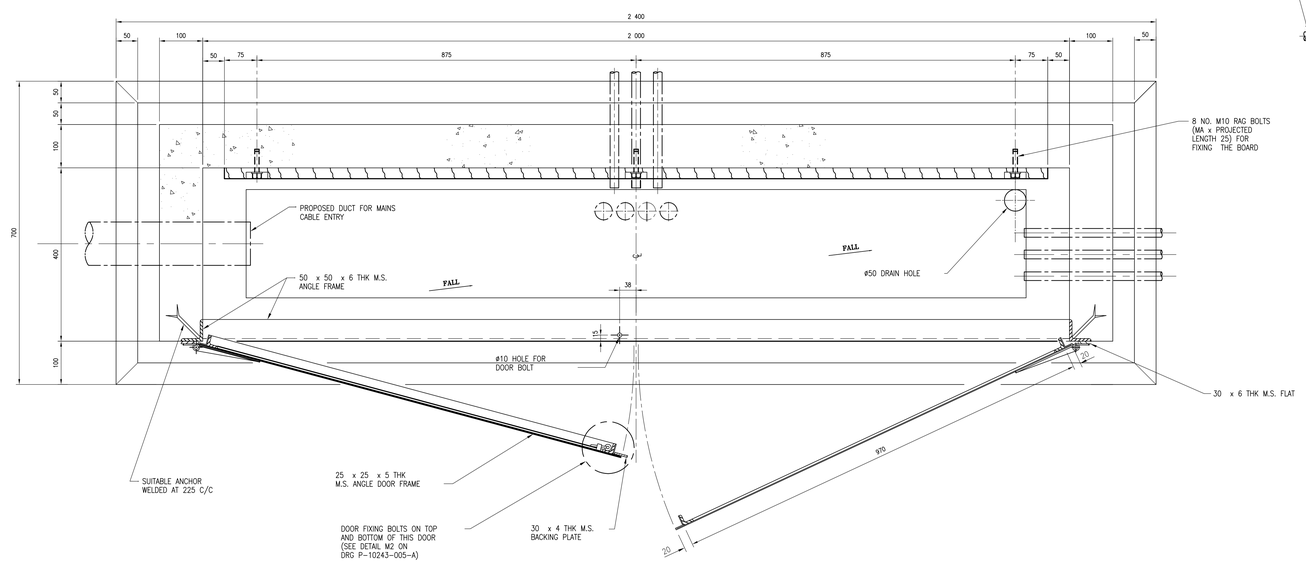

SECTIONAL PLAN

NOTES:

1. ALL DIMENSIONS IN MILLIMETRES.
2. CIVIL CONTRACTOR IS TO PROVIDE ALL WORKS UNLESS SPECIFIED OTHERWISE.
3. THE PVC/G.I. DUCT FOR MAINS CABLE SHALL TERMINATE INSIDE THE NEAREST CABLE DRAW PIT PROVIDED BY THE SUPPLY COMPANY. EXACT ENTRY TO BE DECIDED ON SITE.
4. STEELWORK SHALL BE PROTECTED AGAINST CORROSION TO B.S. 5493 AND PAINT COATINGS APPLIED AS INDICATED IN THE SPECIFICATIONS.
5. SIZES & EXACT POSITIONS OF G.I. DUCTS AND CONDUITS REFER TO RELEVANT DRAWING(S) OR SPECIFICATION.
6. REFER TO ELECTRICAL LAYOUT DRAWING FOR NO. OF G.I. CONDUITS FOR LAYING FROM PILLAR BOX TO THE SUBWAY(S).
7. THIS DRAWING IS TO BE READ IN CONJUNCTION WITH DRG P-10243-005-A FOR THE CONSTRUCTION DETAILS.

no.	date	description	initial
REVISION			

	name	date
designed		
checked	W.S. TAM STO/DP7	11/2004
drawn	C.S. CHOI TO/DP7/1	10/2004

approved: Y.M. LI SPE/7

contract no.

file no. DP 10103

project no.

contract: REFERENCE DRAWING

drawing title: CONCRETE PILLAR BOX (2 000W X 1 500H)

drawing no. P-10243-004-A

scale NIL

PROJECT DIVISION

機電工程署 EMSD

Drawing Rename: P10243EF004.dwg Xref drawings: F5904-REF-A0

Section: DP7 Division: P.D.

A0 1198 x 841