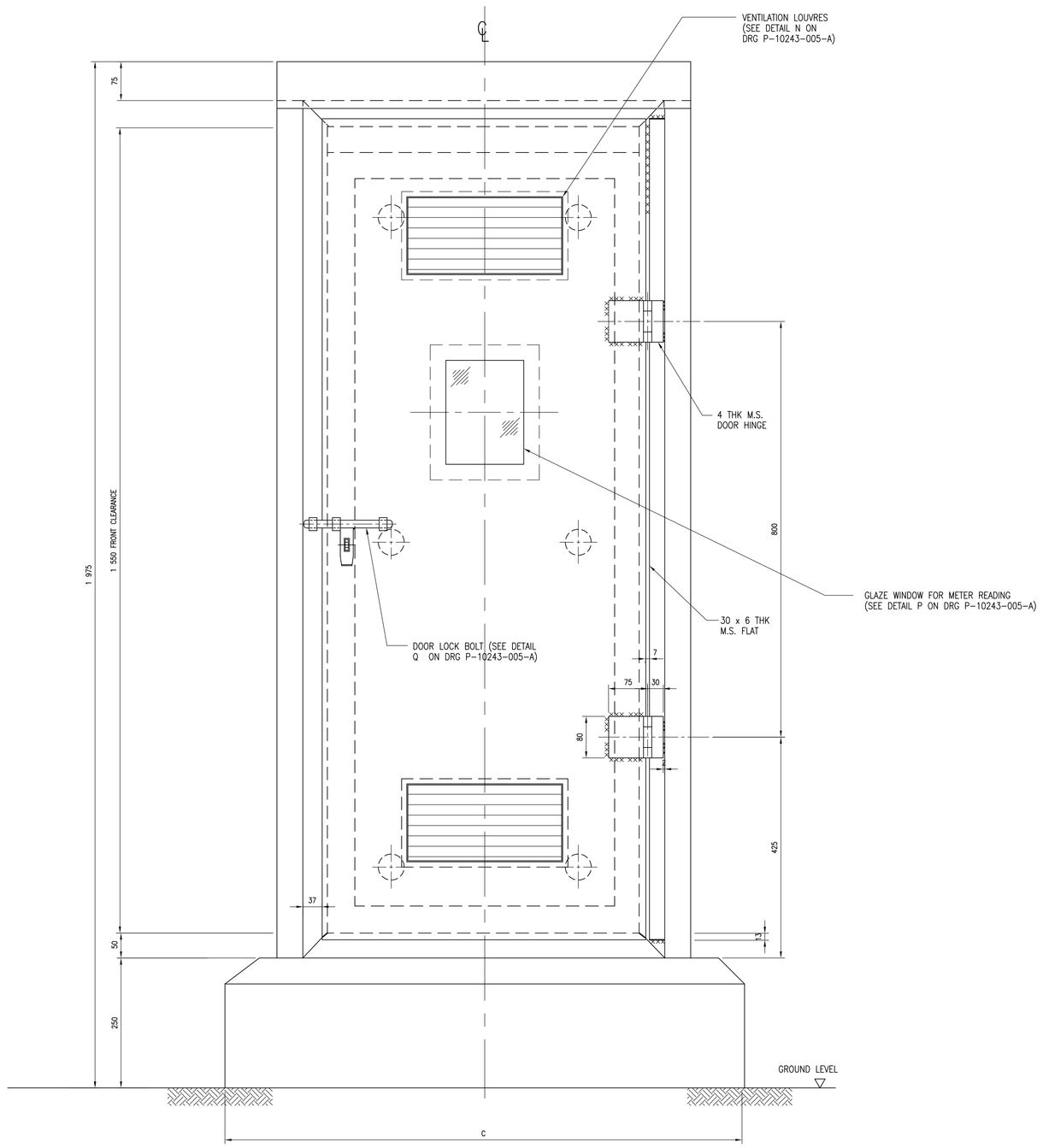

FRONT ELEVATION

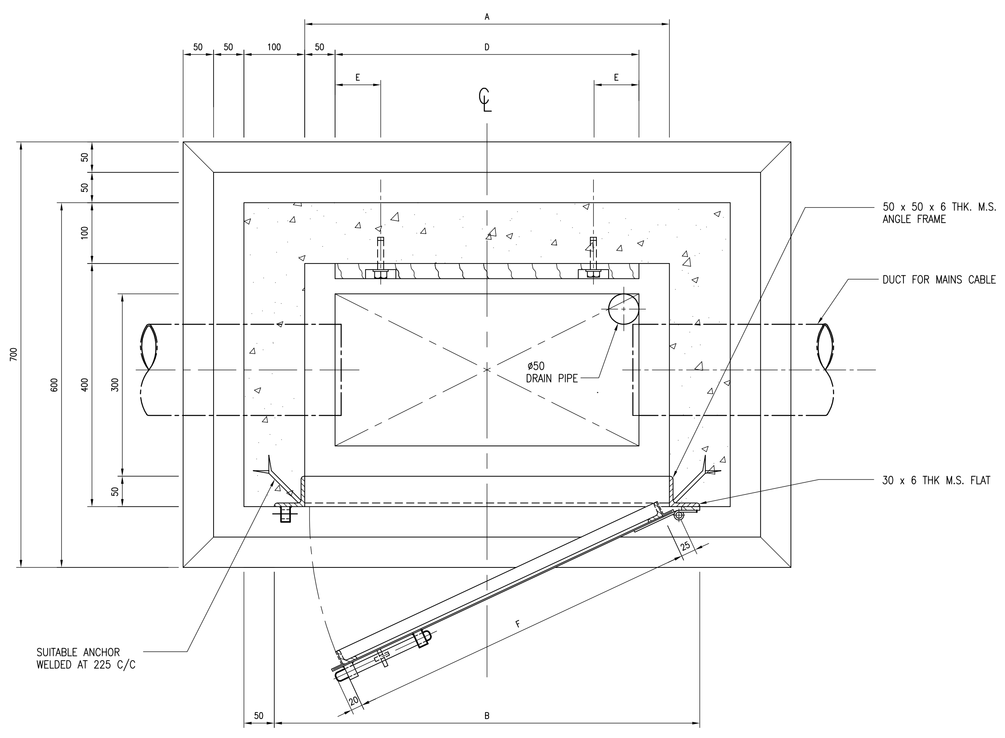

SECTIONAL PLAN

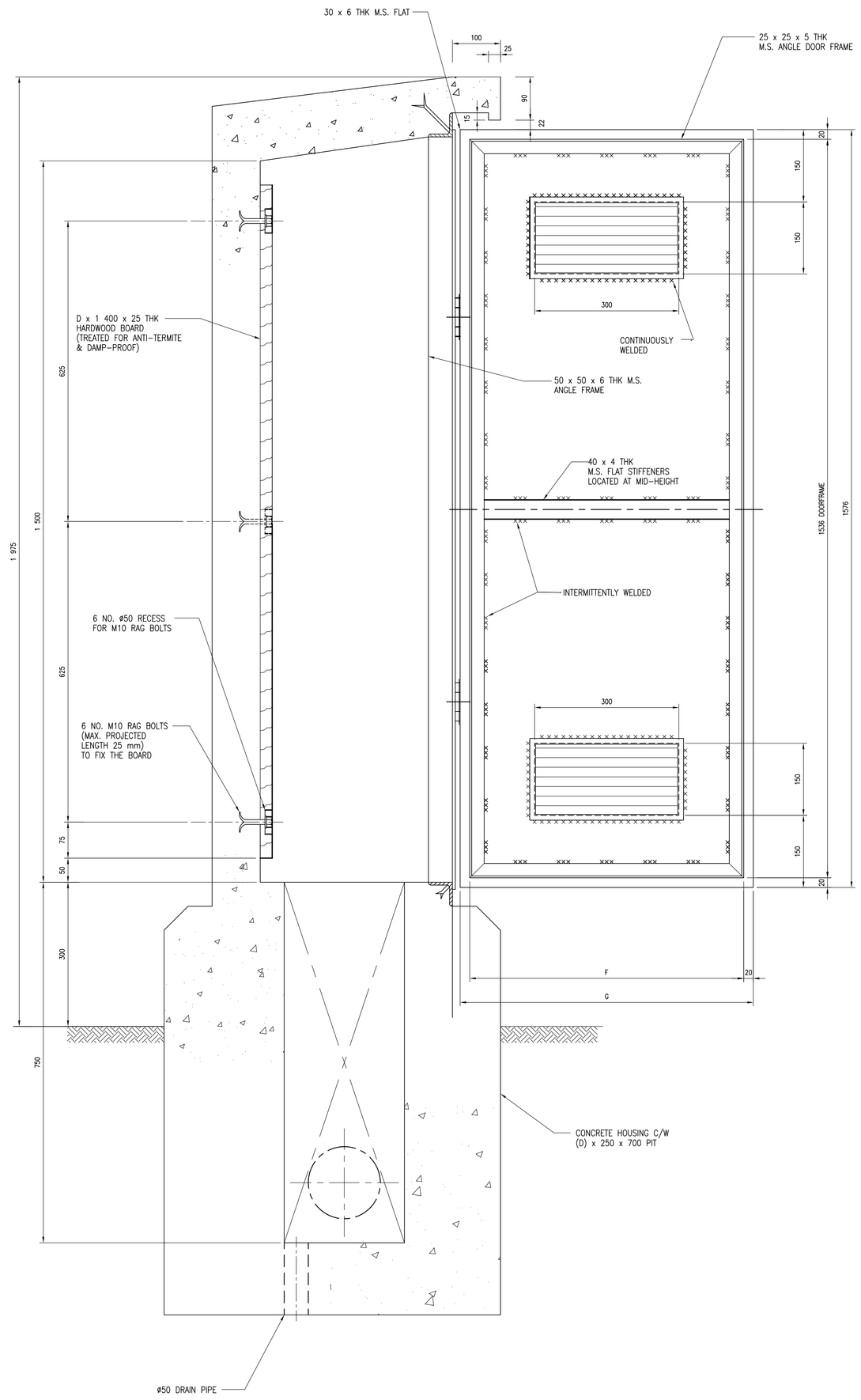

SECTIONAL SIDE ELEVATION
(WITH DOOR OPENED)

DIMENSIONS FOR CONCRETE PILLAR BOX							
WIDTH (mm)	A	B	C	D	E	F	G
600	600	700	1 000	500	75	586	626
750	750	850	1 150	650	100	736	776
900	900	1 000	1 300	800	125	886	926

NOTES:

1. ALL DIMENSIONS IN MILLIMETRES.
2. CIVIL CONTRACTOR IS TO PROVIDE ALL WORKS UNLESS SPECIFIED OTHERWISE.
3. THE PVC/G.I. DUCT FOR MAINS CABLE SHALL TERMINATE INSIDE THE NEAREST CABLE DRAW PIT PROVIDED BY THE SUPPLY COMPANY. EXACT ENTRY TO BE DECIDED ON SITE.
4. STEELWORK SHALL BE PROTECTED AGAINST CORROSION TO B.S. 5493 AND PAINT COATINGS APPLIED AS INDICATED IN THE SPECIFICATIONS.
5. SIZES & EXACT POSITIONS OF G.I. DUCTS AND CONDUITS REFER TO RELEVANT DRAWING(S) OR SPECIFICATION.
6. REFER TO ELECTRICAL LAYOUT DRAWING FOR NO. OF G.I. CONDUITS FOR LAYING FROM PILLAR BOX TO THE SUBWAY(S).
7. THIS DRAWING IS TO BE READ IN CONJUNCTION WITH DRG P-10243-005-A FOR THE CONSTRUCTION DETAILS.

no.	date	description	initial
REVISION			

	name	date
designed		
checked	W.S. TAM STO/DP7	11/2004
drawn	C.S. CHOI TO/DP7/1	10/2004
approved	Y.M. LI SPE/7	

contract no.

file no. DP 10103

project no.

contract

REFERENCE DRAWING

drawing title

CONCRETE PILLAR BOX
(600, 750 AND 900 WIDTH)

drawing no. P-10243-007-A

scale NIL

PROJECT DIVISION

機電工程署 EMSD

Drawing filename: P10243R07007.dwg Ref drawings: FORM-REF-A0

Section: DP7 Division: P.D.

A0 1198 x 841